TOTO

TOILETS

NEOREST NX I
Smart Toilet

CS900KVT#NW1

FEATURES

- Integrated appearance of luxury and streamlined cleanliness to create a elegant and seamless design
- HEATED SEAT with temperature control
- PREMIST water is sprayed inside the toilet bowl to make it difficult for dirt to adhere
- EWATER+ automatically spreads out and keeps clean toilet bowl and nozzle by preventing bacteria with sanitizing effect
- Auto powerful deodorizer activates after every usage
- Auto Soft light function usable for night time usage
- Adjustable warm air dryer
- Automatically cleans the wand jet
- AIR-IN WONDER-WAVE Cleansing provides comfort and eco-friendliness EWATER+ is made from tap water by electrolyzed chloride ion without any chemicals. After use, it returns to normal water in the state of safe and environmental friendly.

SPECIFICATIONS

• Flush System	:	TORNADO FLUSH
• Water Use	:	3.8L / 3L
• Rough-in	:	305 mm
• Water Pressure	:	0.25MPa~0.75MPa*
• Power Rating	:	220~240V**, 50/60Hz, 835~845W
• Material	:	Bowl -Vitreous China
	:	Seat & Cover - PP
• Size	:	468W x 800D x 565H

**Recommended to Use Automatic Water Pressure Pump for minimum 2.5 Bar (0.25 MPa)Water Pressure*

***Recommended to use Voltage Stabilizer 2.0 KVA to avoid Power Fluctuation.*

Recommended to use soft water (Quality of water - Degree of Hardness < 50ppm) milligram/litre

PARTS DESCRIPTION

• CS900KVT#NW1	:	Water Closet Bowl (S-Trap)
• T53P100	:	Floor Flange

COLOURS

- White (CEFIONTECT)
- Brushed Nickel

- Water closet Bowl
- Stop Wall Cover
- Back Center Hinge
- Remote Controller

CS900KVT#NW1

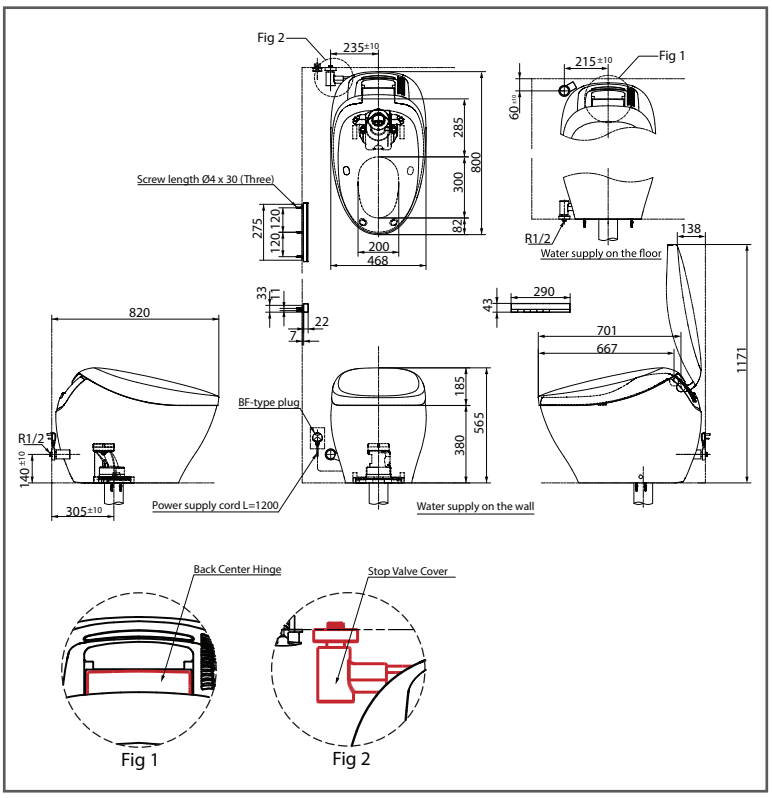

Please consult, TOTO representative for more details.

All rights reserved by TOTO including but not limited to Improve & Change of Product Design, Specs or Availability at any time without prior notice