BAUCURVE
Single-lever basin mixer 1/2"
MODEL # 32805000

Pure Freude an Wasser

GROHE

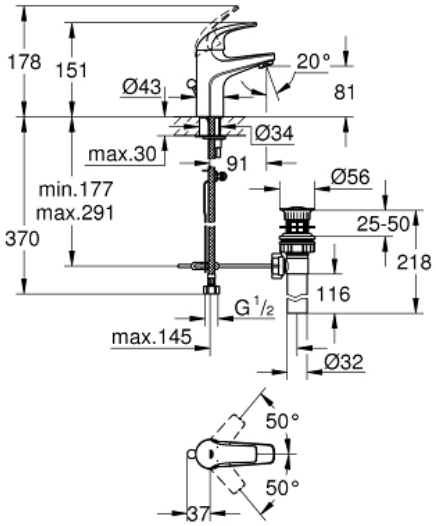

Product Description:
BAUCURVE
Single-lever basin mixer 1/2"

Standard Specification:
single hole installation
metal lever
GROHE Longlife 28 mm ceramic cartridge
GROHE StarLight chrome finish
mousseur
pop-up waste set 1"
flexible connection hoses
rapid installation system

Color:
❑ 32805000 chrome